Truss Technology IN BUILDING

Sprinkler Systems & Wood Trusses

The following information is intended primarily for construction design professionals that design with light wood framing. The goal of this document is to assist in designing safe buildings economically, especially when sprinkler systems are required or desired in the design.

WTCA supports making a positive effort to promote universal building sprinklering for all types of construction and structural elements, provided they are cost effective and do not create a competitive advantage for one structural element over another. Installed and functioning sprinkler systems can save lives and reduce property damage. This is a win for everyone: the owner/occupant, firefighters, insurers and the community in general.

Due to the development of residential sprinkler system standards and components specifically designed to meet residential requirements, a residential sprinkler system can be installed affordably. In general, the inclusion of a sprinkler system can pay for itself through lowered insurance costs, reduced corridor widths, less expensive wall and door assemblies/finishes, the reduction or elimination of exit requirements, and enhanced resale value.

Authoring numerous codes and standards related to fire safety, the National Fire Protection Association (NFPA) is an international non-profit organization advocating fire prevention and safety. The NFPA publishes three separate standards dealing with the installation of sprinklers in buildings. The purpose of the NFPA sprinkler system standards is to fairly evaluate construction practices and materials and define methods to best protect the occupants, the contents and the structure in the event of fire. NFPA 13 is the overarching standard for sprinkler system protection. However, in evaluating the methods promoted by this standard, the implementation of these methods in residential construction was seen as cost-prohibitive. The 13D and 13R standards were created to cover very specific classes of residential construction – single family up to four-story multi-family residential buildings.

The NFPA standards are designed with two specific, but not always equal, considerations:

1. Life protection.
2. Property protection (contents and/or structure).

Protection of life is the primary consideration in residential sprinkler system design. Preservation of property is generally dominant in non-residential design.

Because of the variation in the adoption of the NFPA standards into national, regional, state and local building codes, the design professional is responsible for understanding and designing to the governing local code.

The information on the following pages is based upon the 1999 edition of the NFPA standards. It is intended to provide general guidance and does not represent the full complexity of the NFPA standards.

Copyright © 2002 Wood Truss Council of America, Inc. TTB-Sprinkler Systems 020913

SELECT BUILDING TYPE FROM ONE

NFPA 13D - One- & Two-Family & Manufactured Homes:

(as defined by NFPA 13D:1-3)

If sprinklers are specified or required . . .

LOCATION OF SPRINKLERS:
All areas are to be sprinklered per the 13D requirements except the following (13D:4-6):

- Bathrooms 55 ft^2 and less.
- Closets 24 ft^2 and less.
- Garages, open attached porches, carports and similar structures.
- Attics, crawl spaces and other concealed spaces that are not used or intended for living purposes.
- Entrance foyers that are the only means of egress.

NOTE: Although basements are not an exception, a basement can be sprinklered as if the ceiling were finished (13D:4-2.4).

NOTE: There are special sprinkler requirements for dwellings of limited areas: that do not exceed 2000 ft^2, have a single story, smooth ceilings, roof pitch of less than 10°, and wall heights for horizontal ceilings of less than 8' and sloped ceilings of less than 9' (13D:5-1).

SPRINKLER HANGER REQUIREMENTS:
13D has its own specific sprinkler hanger requirements. Since most residential sprinkler systems use the domestic water system, little extra design loading is required for roof or floor systems.

GENERAL NOTES:

Regardless of whether a sprinkler system is installed or not, smoke detectors, draft and firestop construction, and rated assemblies must be included as required by the governing building code.

Although exceptions to sprinklering certain areas are allowed, the level of safety is not equivalent to that if the area were sprinklered. However, the building is still considered sprinklered throughout as required by the model codes.

Special sprinklers have been developed for specific applications in concealed roof/ceiling or floor/ceiling cases where trusses are used. These address protection for flat concealed spaces as well as pitched roof attic spaces, including hipped roofs.

NFPA 13R - Multi-Family 4 Stories or Less:

This category includes (as defined by NFPA 13R:1-3):

- Apartment buildings and condominiums.
- Lodging and rooming houses.
- Board and care facilities (slow evacuation type).
- Hotels, motels and dormitories.

If sprinklers are specified or required . . .

NOTE: Some building codes allow a 2-hour adjacent separation wall to divide larger multi-family buildings into one- and two-family dwellings allowing them then to be sprinklered per NFPA 13D requirements.

LOCATION OF SPRINKLERS:
All areas are to be sprinklered except the following (13R:2-6):

- Bathrooms 55 ft^2 and less.
- Closets 24 ft^2 and less.
- Porches, balconies, corridors and stairs that are open and attached.
- Attics, penthouse equipment rooms, crawl spaces, floor/ceiling spaces, elevator shafts and other concealed spaces that are not intended for living purposes or storage.

NON-DWELLING AREAS require sprinklering according to NFPA 13 standard requirements except (13R:2.5.2):

- Some compartmented areas under 500 ft^2.
- Lobbies that have flat ceilings and are 10' or less in height may use residential sprinklers, with a maximum system demand of four sprinklers.
- The space above open garage doors is not considered an obstruction; however, the garage itself requires sprinklering.

SPRINKLER HANGER REQUIREMENTS:
Sprinkler hangers follow NFPA 13 standard requirements. Roof and floor design loads must be adjusted for sprinkler system weights (see further discussion on back page).

NOTE: Where good design allows there can be an economic advantage to designing a building to fit within the requirements of NFPA 13R rather than NFPA 13. However, some code jurisdictions require NFPA 13 protection for buildings in this category.

Examples of truss design loads imposed by spri

E OF THE THREE COLUMNS BELOW:

NFPA 13 - Everything Else Follows NFPA 13 Standard:

Roof/Ceiling or Floor/Ceiling assemblies can be constructed either in an open space environment or be constructed with ceilings that enclose the structural members and create concealed spaces within the floor or roof assemblies. There are two categories of construction type defined to determine the spacing and positioning rules for sprinklers - **OBSTRUCTED** or **UNOBSTRUCTED CONSTRUCTION**.

Examples of **OBSTRUCTED CONSTRUCTION** (13:1-4.6 & A-1-4.6) include:

- Beam and Girder – spaced 3' to 7.5' on center and 4" or greater in depth.
- Composite Wood Joists (I-Joist) – requiring firestopping so channels do not exceed 300 ft^2.
- Panel – where spacing of structural members creates panels of less than 300 ft^2.
- Semi-Mill (modified standard mill) – with greater column spacing and beams resting on girders.
- Wood Joists (2x or 4x wide max and 14" deep max) – regardless of spacing.

Examples of **UNOBSTRUCTED CONSTRUCTION** (13:1-4.6 & A-1-4.6) include:

- Any construction where supporting members are spaced 7.5' on center or greater.
- Where spacing is less than 7.5' on center, any structural member that is not solid and where openings are at least 70% of cross section and the depth does not exceed the least dimension of the openings.
- Bar Joists – including some types of wood trusses.
- Open Grid Ceilings.
- Smooth Ceilings.
- Standard Mill – heavy timber construction.
- Wood Truss – parallel or pitched chord.

(Wood trusses can be considered obstructed under some circumstances. See 70% rule on back page.)

If the assembly is constructed as a floor/ceiling or roof/ceiling arrangement and is partially or wholly enclosed by combustible construction, the concealed space may be required to be protected by sprinklers.

CONCEALED COMBUSTIBLE SPACES, exceptions to the requirement for sprinklers in combustible floor/ceiling or roof/ceiling concealed spaces are allowed (13:5-13.1) where the space is:

- Formed by studs or joists with less than 6" between edges.
- Formed by bar joists with less than 6" between roof/floor and ceiling.
- Formed by ceilings attached to or within 6" of wood joists.
- Formed by ceilings directly attached to composite wood joists provided joist channel is firestopped into volumes not exceeding 160 ft^3 with material equal to that of the webs.
- Entirely filled with noncombustible insulation.*
- Within wood or composite joist construction with insulation filling space from ceiling to bottom of joist and in composite wood construction firestopped into volumes not exceeding 160 ft^3 with material equal to that of the webs.
- Over isolated small rooms not exceeding 55 ft^2 in area.
- Created with rigid materials with an exposed surface having a flame spread rating of 25 or less.
- Constructed entirely of fire-retardant treated lumber as defined by NFPA 703.*
- Noncombustible construction having exposed combustible insulation where the heat content of the facing and substrate does not exceed 1000 BTU/ft^2.*
- Created by insulation laid directly on top of or within the ceiling joists in an otherwise sprinklered attic.
- A pipe chase under 12 ft^2 formed by studs of wood joists, provided they are firestopped at each floor and contain no sources of ignition.

*applies to truss systems

nkler systems can be found in Section 17 of WTCA's Metal Plate Connected Wood Truss Handbook.

70% RULE:

(Unobstructed Construction 13:A-1-4.6)

In these examples, a single panel is being calculated. If a truss is not completely uniform, the entire truss will have to be included in the calculation. This rule can only be applied to a specifically designed truss.

The truss members in the following example are 2x4 oriented horizontally:

Area of the panel = 24" x 36" = 864 in^2
Chords = 2 x (36" x 1.5") = 108 in^2
Webs = 2 x (27.66" x 1.5") = 83 in^2
Total area = 108 + 83 = 201 in^2
Area of panel divided by obstructed area = 201/864 = 0.233 or 24%

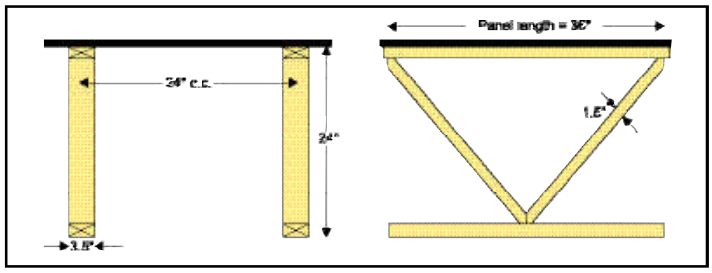

The panel is 76% open, therefore this configuration would be considered **UNOBSTRUCTED CONSTRUCTION.**

The truss members in the following example are 2x4 oriented vertically:

Area of the panel = 24" x 36" = 864 in^2
Chords = 2 x (36" x 3.5") = 252 in^2
Webs = 2 x (27.66" x 3.5") = 194 in^2
Total area = 252 + 194 = 446 in^2
Area of panel divided by obstructed area = 446/864 = 0.516 or 52%

The panel is 48% open, therefore this configuration would be considered **OBSTRUCTED CONSTRUCTION.**

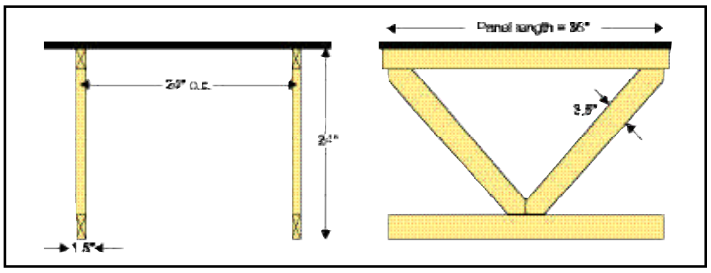

DESIGN LOAD CONSIDERATIONS:

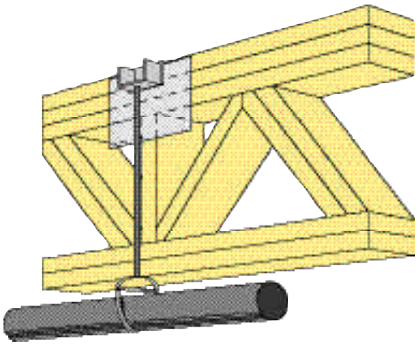

The Building Designer must include adequate dead load information (i.e., magnitude and exact location) to account for the additional weight of the sprinkler system (generally expressed in pounds per square foot). Not only must the dead load of the sprinkler system be provided but also the specific locations of the load attachments for the truss design process. In addition, a 250 pound load per attachment must be applied to accommodate installation personnel per NFPA 13:6-2.1.3. This is a short term load not applied simultaneously to all support points nor simultaneous with other short duration loads.

It is generally best to support the sprinkler system from the top chord of the truss. When conditions require that attachment be made to truss bottom chords, special provisions must be made by the Truss Manufacturer. Trusses can support significantly higher loads at panel points (i.e., where the chords and web members meet) than in the spaces between panel points. The location of the pipe support relative to the panel points of the truss is critical for the design. Once the support connection types and points have been determined, it is critical that they are followed during the installation process.

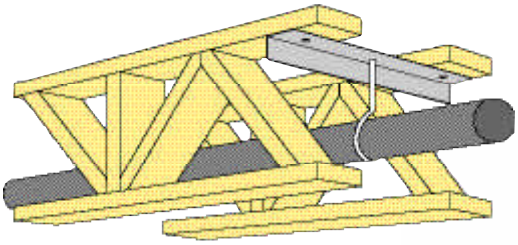

Smaller point loads are generally designed to be carried by each truss. However, the larger point loads created by large diameter sprinkler lines, significant risers and lines running parallel to trusses may require very specific attachment points or additional members. Refer to NFPA 13:6 and the *Metal Plate Connected Wood Truss Handbook* (Section 17) for further support information.

Wood Truss Council of America
One WTCA Center
6300 Enterprise Lane • Madison, WI 53719
608/274-4849 • 608/274-3329 (fax)
www.woodtruss.com • wtca@woodtruss.com

Truss Technology IN BUILDING
An informational series designed to address the issues and questions faced by professionals in the building construction process.

Copyright © 2002 Wood Truss Council of America, Inc.
Reproduction of this document, in any form, is prohibited without written permission from WTCA. This document should appear in more than one color.